DRAWING NO. 2-80-399-11360

ALL DIMENSIONS ARE IN MILLIMETRES

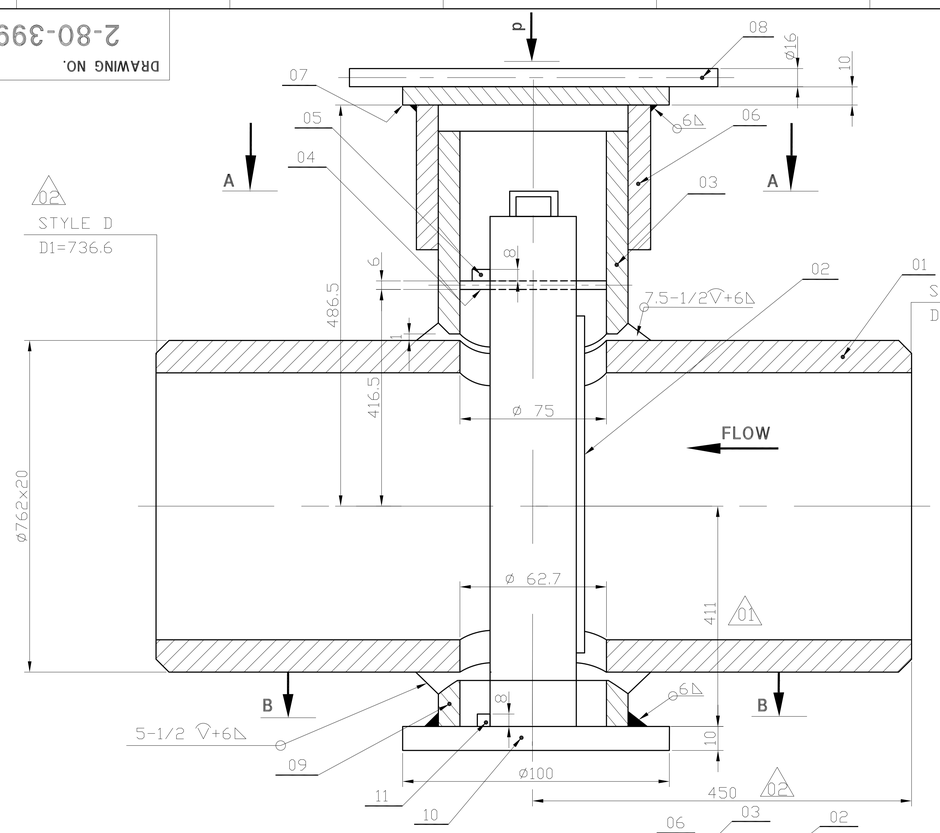

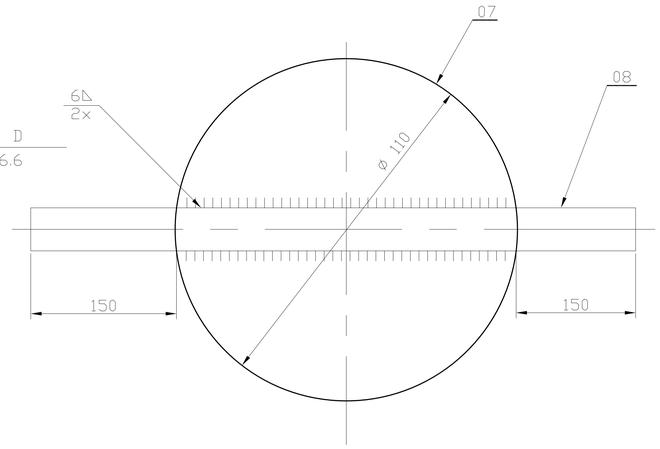

VIEW - P

NOTES :-

01. SMOOTH INSERTION OF TRAGET HOLDER WITH PLATE (ITEM NO 02) MUST BE ENSURED SUCH THAT IT RESTS ON BOTTOM PLATE (ITEM NO 10) BUTTING AGAINST ITEM NO 04,05&11. ITEM NO 04&05 ARE TO BE CUT TO SUIT THE INNER SURFACE OF ITEM NO 03

02. FLOW DIRECTION MUST BE MARKED ON THE OUTER SURFACE OF MAIN PIPE (ITEM NO 01)

03. FOR SITE:- PLASTIPEEL MUST BE REMOVED AT SITE BEFORE INSERTING TARGET HOLDER (ITEM NO 02) FOR STEAM BLOWING

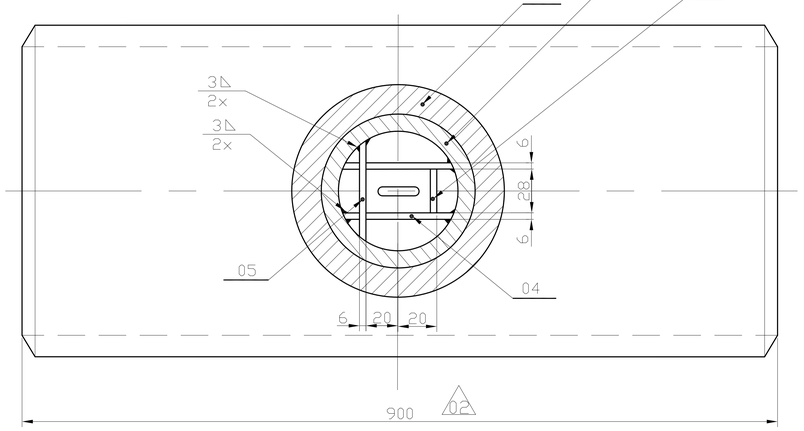

SECTION - AA

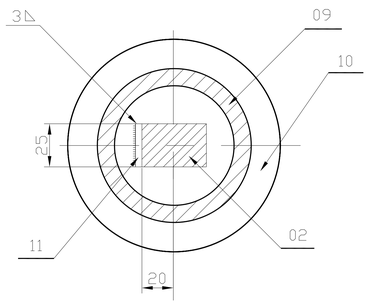

SECTION - BB

VAR NO	ITEM NO	DESCRIPTION	DRAWING NO	ITEMNO / VAR.NO	MATERIAL CODE / MATERIAL SPECN	A / C	UNIT WEIGHT / QUANTITY
	11	GUIDE STRIP PLATE 6 x 8 X 36	2-80-399-11360		15 211 092 0000 / S 2062 Fe410 WA	C	0.010 / 1
	10	PLATE 10 DIA 100	2-80-399-11360		15 211 098 0000 / S 2062 Fe410 WA	C	0.600 / 1
	09	PIPE OD 73X 5.16 L=28	4-80-999-99034		15 182 042 0000 / SA 106 Gr.B	C	0.240 / 1
	08	ROD DIA 16 L = 410	2-80-399-11360		15 339 139 0000 / SA 105		0.700 / 1
	07	PLATE 10 DIA 110	2-80-399-11360		15 211 098 0000 / S 2062 Fe410 WA	C	1.000 / 1
	06	PIPE WITH INTERNAL THREAD	4-80-999-99033		15 039 134 0000 / SA 105	C	1.300 / 1
	05	PLATE 6 8 x 64	2-80-399-11360		15 211 092 0000 / SA 515 Gr.70	C	0.024 / 1
	04	ROD DIA 6 L = 70	2-80-399-11360		15 004 026 0000 / S 2062 Fe410 WA		0.016 / 2
	03	PIPE WITH EXTERNAL THREAD	4-80-999-99032		15 039 134 0000 / SA 105	C	1.200 / 1
	02	TARGET PLATE HOLDER ASSEMBLY : Nb 750	3-80-399-29114		- / SUB ASSY		7.937 / 1
	01	PIPE OD 762 x 20 L = 900	2-80-399-11360		15 983 571 6000 / SA 106 Gr.C	C	198.02 / 1

CUST NO. | REL NO.

REV	DATE	ALTERED / APPROVED	
02	08.02.13	ALTERED	PRABHAKARAN
		APPROVED	RAJITHA
ZONE	D1 VALUE INDICATED IN DRG REVISION MARKED AS 02		

REV	DATE	ALTERED / APPROVED	
01	06.02.13	ALTERED	E VENU KUMAR
		APPROVED	PRABHAKARAN K
ZONE	DRAWING REVISED IN ZONE C-5 REVISION MARKED AS 01		

CAUTION: The information on this document is the property of BHARAT HEAVY ELECTRICALS LTD. It must not be used directly or indirectly in any way detrimental to the interest of the company

CUSTOMER:

NAME OF PROJECT:

BHARAT HEAVY ELECTRICALS LIMITED
PIPING CENTRE
CHENNAI 600 017

	NAME	SIGN	DATE
DRN	S. KAVITA		22.12.12
CHD	S.RAMAMURTHY		22.12.12
APPD	KV RAMANI		22.12.12

NO.OF VAR.

DEPT ENGG. CODE | GRADE OF UNTOL. DIM C/M/F | SCALE N.T.S | WEIGHT (KG) 210.998 | ITEM No.

TITLE **TARGET PLATE ASSEMBLY FOR STEAM BLOWING OD762X20**

CARD CODE U 01

PC DRAWING NO. 2-80-399-11360

REV 02

Size A2